BRIDGE PRO

36 LITRE DIGITAL

AIR FRYER
DUAL ZONE OVEN

Cook 2 food 2 ways in customized zones
at the same time with one device



543316

When using electric appliances basic safety precaution should always be followed. Do not use BridgePro Air Fryer Dual Zone Oven until you have read this manual thoroughly. Please keep this instruction manual in a safe place.

Visit BridgePro Online Store **www.bgepro.com/shop/**
Download our Recipe Cookbook at **www.bgepro.com/bridgepro-air-fryer-recipes/**

UK CA CE

TABLE OF CONTENTS

IMPORTANT SAFEGUARDS 3
GETTING TO KNOW YOUR AIR FRYER DUAL ZONE OVEN 7
- MAIN COMPONENTS 7
- INTELLIGENT CONTROL PANEL 8
- INSTRUCTIONS FOR USE 8
- BEFORE FIRST USE 12
- OPERATING INSTRUCTIONS 12
- MENU FUCTION SELECTION 13
- CUSTOM MODE 15
- COOKING TIME AND TEMPERATURE SETTING 15
- LIGHTING 15
- ROTISSERIE ROTATE FUNCTION 16
- PAUSE FUNCTION 16
- COOKING COMPLETE 17
- CLEANING AND MAINTENANCE 18
- PRODUCT SPECIFICATION & PARAMETERS 18

APPENDIX 1 20
- TROUBLESHOOTING 20
- FAULT CODES 21
- ENVIRONMENTAL PROTECTION FIRST 21

WARRANTY 22
- REGISTER WARRANTY 22

TERMS & CONDITIONS 23
DECLARATION OF CONFORMITY 24
NOTES 25

IMPORTANT SAFEGUARDS

Always follow basic safety precautions when using your Air Fryer Dual Zone Oven.

READ ALL INSTRUCTIONS BEFORE USE

- **Do not** immerse the power cord, plug or the entire unit in water or wash it under the tap to avoid damage or danger.
- Avoid any liquids entering the equipment to prevent electrical shocks or short circuits.
- **Do not** cover the air inlets, outlets and sockets on the appliance during work.
- When removing food or utensils from the cavity, the carrying tong provided should be used or insulated oven gloves worn to avoid burns from the heat.
- The appliance will become hot during operation, so be careful not to touch the inside of the oven cavity.
- **Do not** pour oil into the inner cavity as it may cause a fire hazard. Clean and empty the drip trays after use. Do not allow oil build up on the accessories or the drip trays.
- **Do not** observe or touch the air outlet of the appliance during operation as hot steam may be released and cause burns.
- Ensure that your output voltage corresponds to the voltage specified on the appliance rating.
- Ensure that your power supply can carry no less than 13A.
- Before use, check the electrical power cord and accessories for damage.

- Children should be supervised to ensure they do not play with the appliance. Keep the appliance out of reach of children.

- **Do not** hang the power cord over the edge of a sharp table or counter or in contact with a hot surface.

- **Do not** plug in the power supply or operate the control panel with wet hands.

- **Do not** place or use this appliance on or near tablecloths, curtains, wallpaper and other flammable materials to avoid burning.

- Connection of external power cables is not permitted.

- **Do not** place plastic plates, bowls, protective film or containers or non-heat resistant materials into the appliance or oven cavity when the appliance is in operation.

- The appliance should be placed on a horizontal or stable tabletop when in use.

- **Do not** place on plastic, wooden boards or any other surface that is not heat and wear resistant.

- **Do not** place anything on top of the appliance. Ensure the appliance is placed at least approximately 10 cm from walls or on other apparatus. Do not operate inside a wall cabinet.

- **Do not** use this product unattended.

- During operation, hot steam is exhausted through the rear exhaust port. Hands and face should be kept at a safe distance away from all exhaust vent. Care must be taken when in close proximity to the appliance when in operation.

- After operation, when you open the oven door and remove the drip tray (with the oil residue collected) or remove any accessory from the oven cavity, keep your face away from the door and oven cavity to avoid hot air reaching your face or to avoid burns.

- If the pre-set time is too long during a cooking operation, the food will burn and smoke may be released from the exhaust port. Immediately cut off the

power and clean food waste and grease from the grease tray and other accessories.

- After use, wait for the appliance to cool down before switching off. Switch off the appliance using the power button and then unplug from the socket to avoid inadvertently pulling the power cord directly and forcibly when opening the oven door.

- **Do not** use the appliance if the power cord or electrical components are damaged. Consult a qualified professional to apply repair and to avoid danger.

- **Do not** operate the appliance by pressing the safety switch while the appliance door is open.

- The device cannot be operated by an external timer or by a separate remote control system.

- During a cooking operation, easily accessible parts of the appliance become very hot and should be kept away from children.

- This appliance is not intended for use by persons (including children) with reduced physical, sensory or mental capabilities, or lack of experience and knowledge, unless they have been given supervision or instruction concerning use of the appliance by a person responsible for their safety. Children should be supervised to ensure that they do not play with the appliance.

- Cleaning and user maintenance should not be carried out by children.

- This appliance is suitable for domestic and similar uses only.

NOTE

- This appliance is suitable for domestic use and should not be used outdoors.

- **You may smell a slight odor and smoke on first use. This is due to the production residue burning off the appliance and heating elements upon initial use. This is completely normal and will fade away with use.**

- **Do not** use any accessories that are not supplied with the appliance.

- Before cleaning, unplug the appliance from the socket and allow it to cool down before cleaning.

- Unplug the appliance when not in use.

- The manufacturer or retailer is not responsible for any problems arising from incorrect use by the customer.

- **Do not** unplug the appliance immediately after cooking to avoid damage to the appliance due to increased residual temperature inside the appliance.

- After cooking and the appliance has cooled down, unplug it from the mains, clean the oven cavity, clean the waste in the drip tray and place it in a ventilated, dry and non-corrosive environment.

- **Do not** use coarse or acidic detergents or sharp metal scrapers to clean the appliance or glass doors. If the surface of the glass is scratched, this can cause the glass to break.

- **Do not** clean with metal scouring pads. Pieces can break off the pad and touch electrical parts, creating risk of electrical shock, or shorting of electrical circuitry.

- **Do not** clean with acidic cleaning substances and solutions. ACIDIC SUBSTANCES will disclosure the appliance internal surface and lead to corrosion and rust formation.

The internal metal within the appliance is made from stainless steel. Stainless steel is naturally corrosion-resistant, but it is not immune to rust. Exposure to damaging chemicals like abrasive or acidic cleaning agents (e.g. containing any amount of hydrochloric or sulphuric acid, bleach, or chlorine, vinegar, and such liquids) will cause corrosion. Use of such cleaning agents invalidates your warranty.

GETTING TO KNOW YOUR AIR FRYER DUAL ZONE OVEN

MAIN COMPONENTS

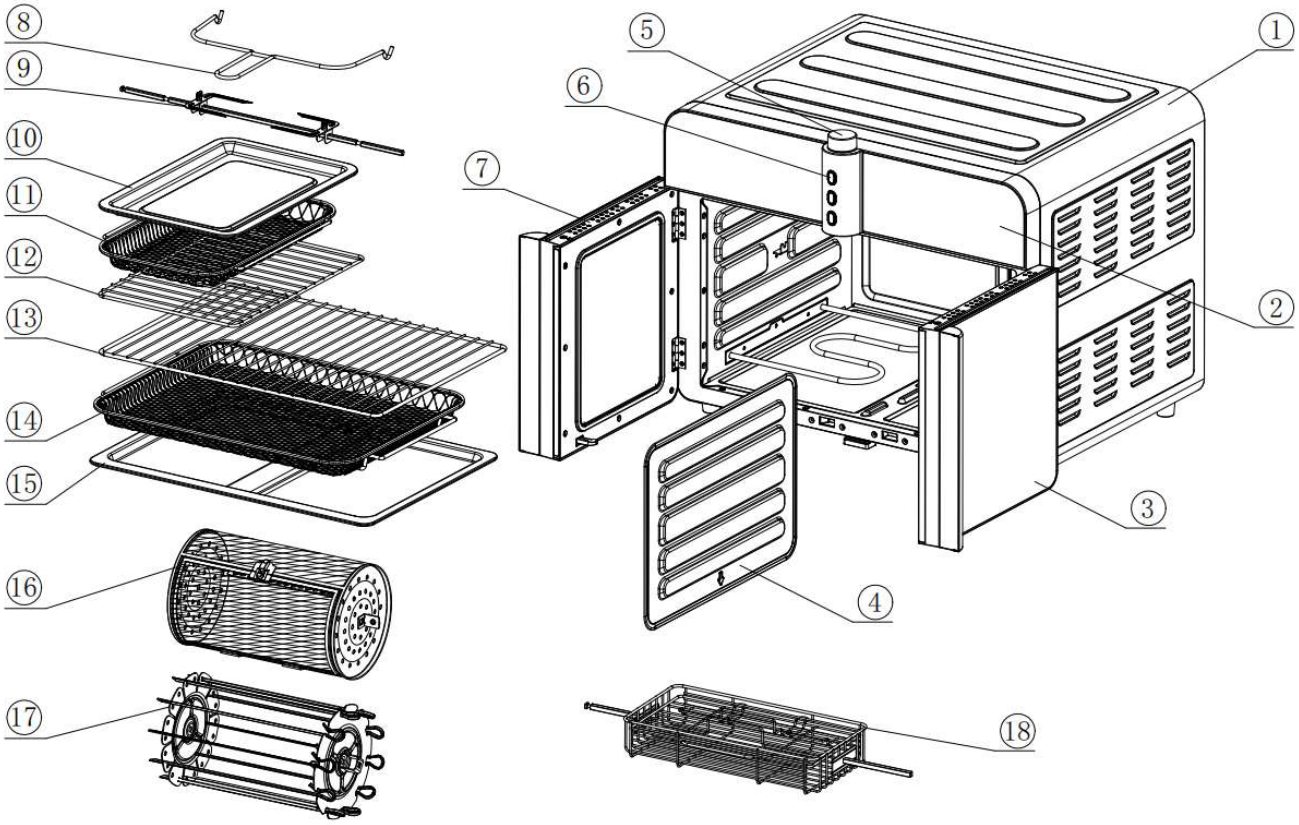

1. Housing	**10.** Small drip tray (for dual zone use - *spares part 543316-1)*
2. Panel	**11.** Small rotisserie basket (for dual zone use - *spares part # 543316-2)*
3. Right door assembly	**12.** Small oven rack/cooler (for dual zone use*)*
4. Dual zone partition/ Spacer	**13.** Large oven rack/cooler (for single zone use)
5. Menu / Control Knob	**14.** Large rotisserie basket (for single zone use - *spares part # 543316-2)*
6. Keystrokes	**15.** Large drip tray pan (for single zone use - *spares part # 543316-1)*
7. Left door assembly	**16.** Rotisserie rotating drum (*spares part # 543316-4)*
8. Carrying tong	**17.** Rotisserie rotating skewer (*spares part # 543316-5)* - ***NOT INCLUDED, BUT AVAILABLE*** Available at www.bgepro.com/product-tag/36l-air-fryer/
9. Rotisserie fork *(spares part # 543316-3)*	**18.** Steak stand - ***NOT INCLUDED, BUT AVAILABLE*** Available at www.bgepro.com/product-tag/36l-air-fryer/

INTELLIGENT CONTROL PANEL

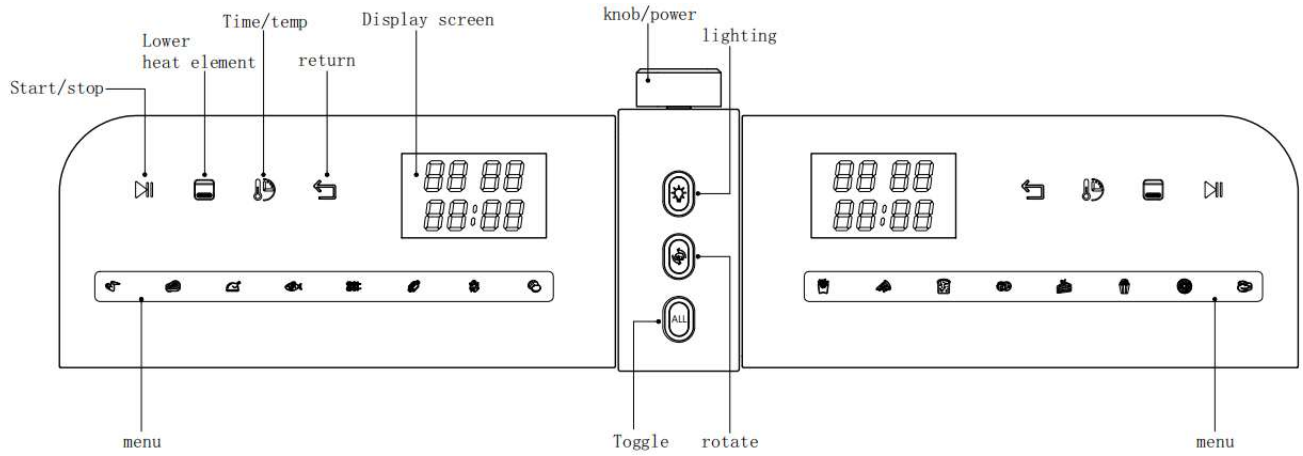

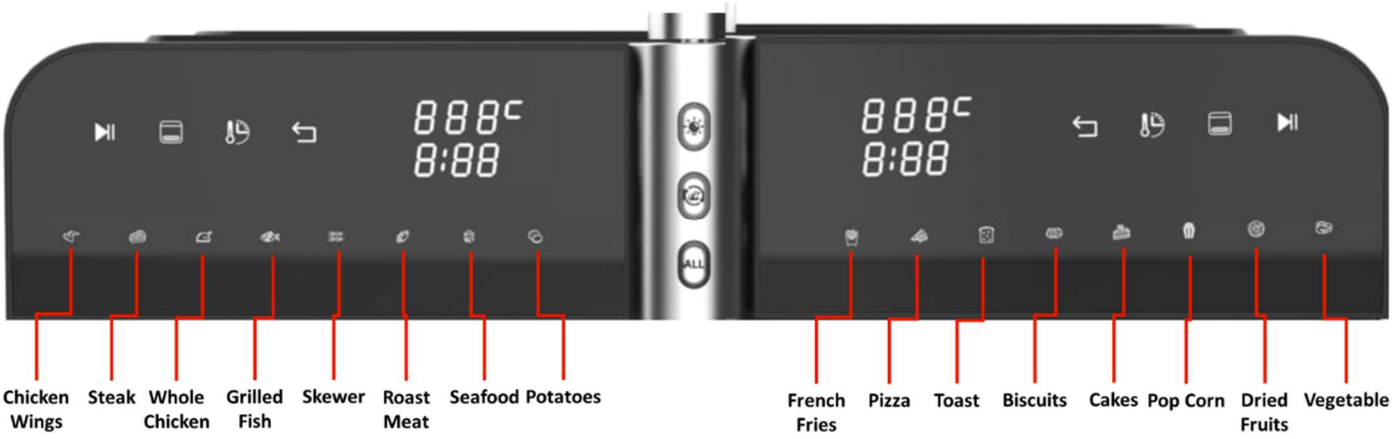

INSTRUCTIONS FOR USE

1. Place the appliance on a stable heat-resistant horizontal surface.

Leave at least 10 cm of space at the back and sides of the appliance, and >30 cm at the top. Keep away from curtains, wall coverings, and combustible materials.

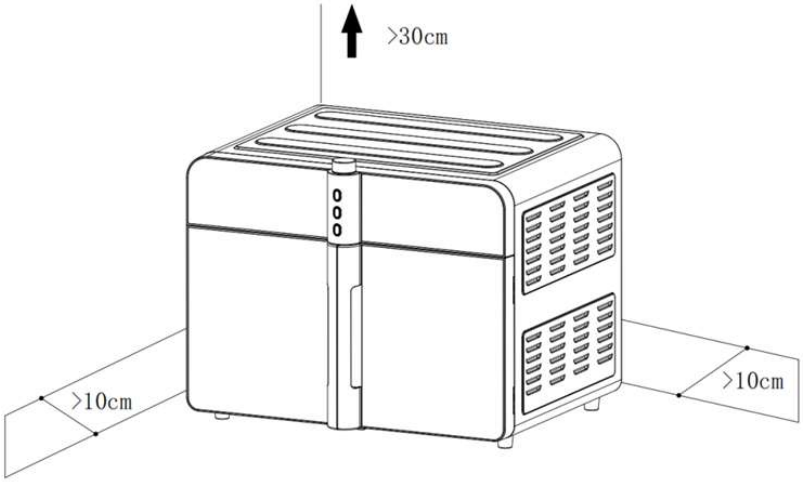

2. The use of the dual zone spacer is set out below. The spacer should be pushed in against the middle slot.

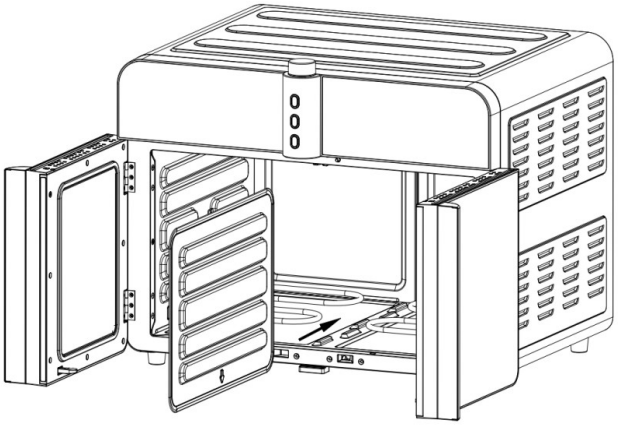

3. The use of the dual zone (small) accessories are as shown below. Fit the spacer first and then place the small drip trays beneath the heating elements to catch oil and food waste at the lowest oven rack position. Other small dual zone accessories may be used as desired in other rack positions in the appliance.

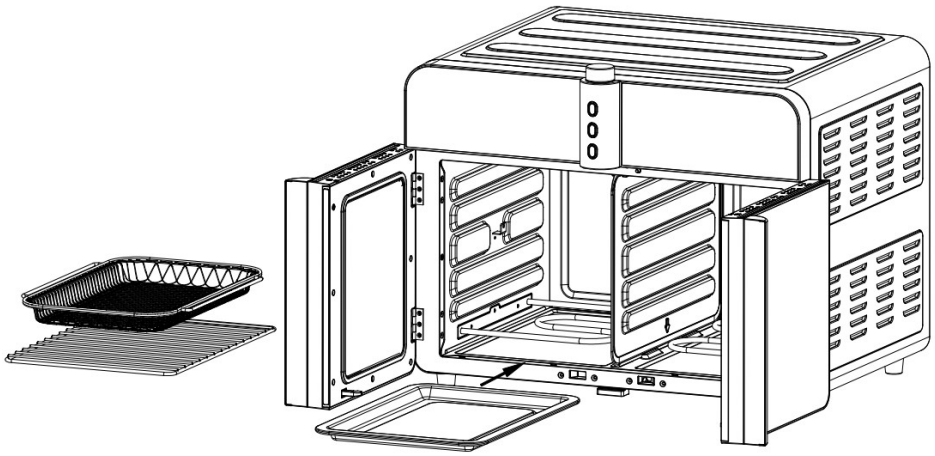

4. The use of the single zone (large) accessories are as shown below. Position the large drip tray beneath the heating elements to catch oil and food waste at the lowest oven rack position. Other large single zone accessories may be used as desired in other rack positions in the appliance.

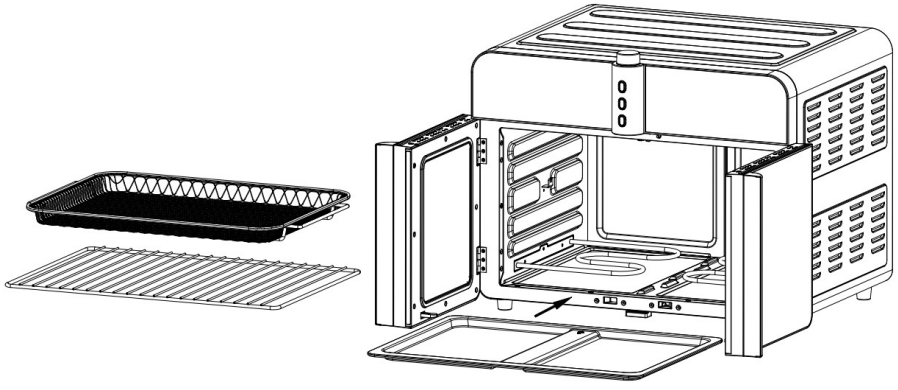

5. The use of the rotisserie rotating skewer accessory (OPTIONAL SPARE, NOT INCLUDED) is as shown in the following section.

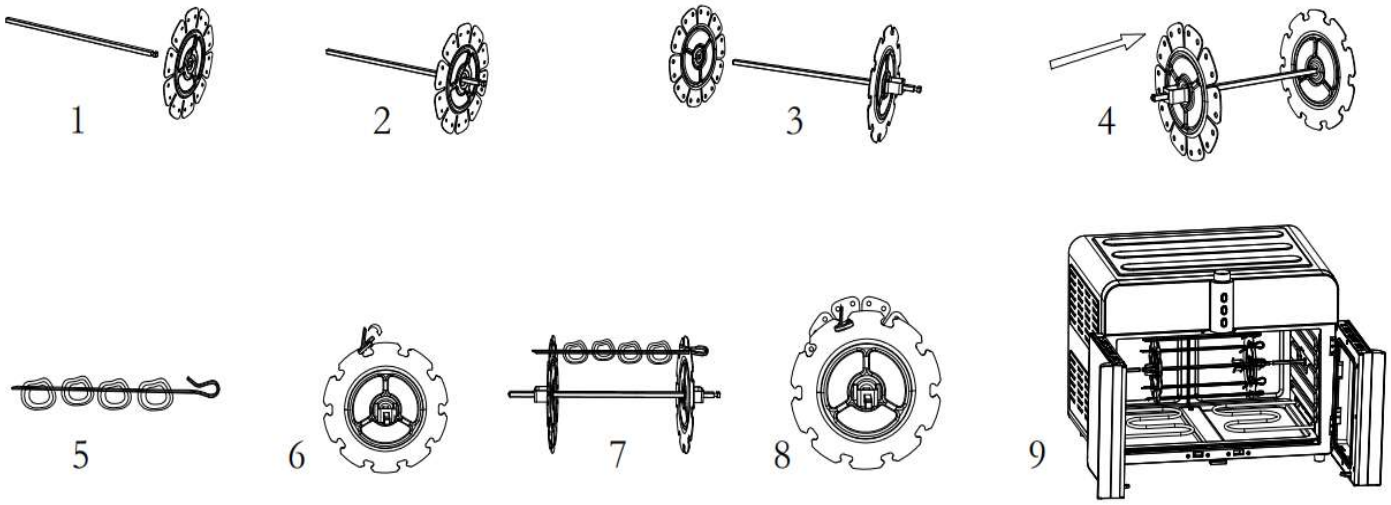

6. The use of the rotisserie rotating drum accessory is as shown in the following section.

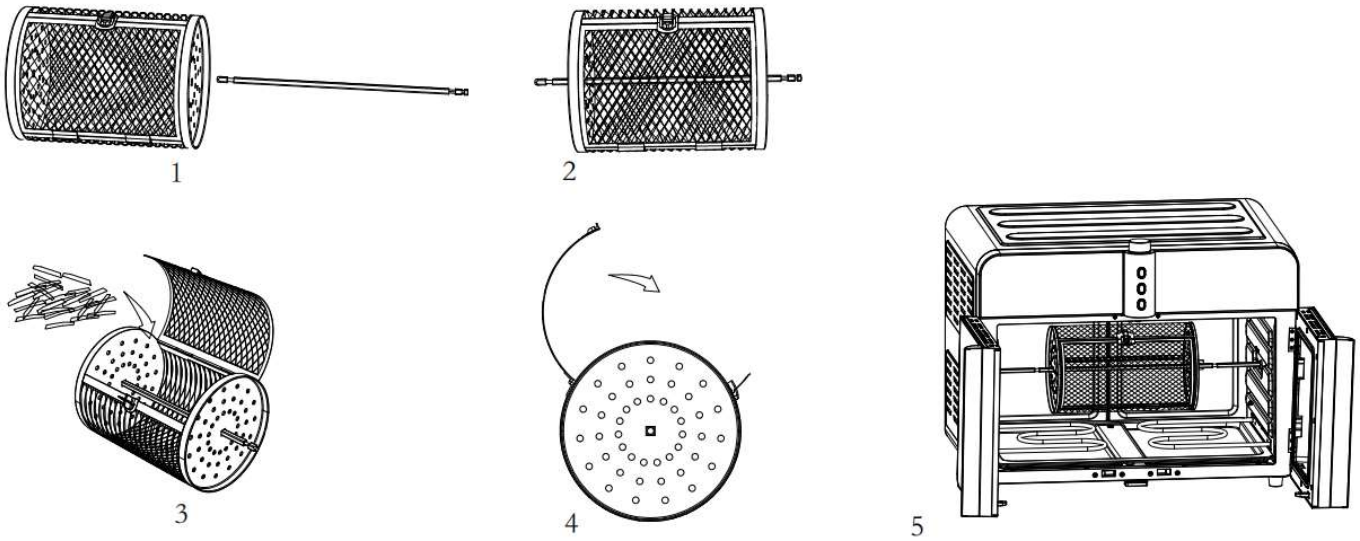

7. The use of the steak rack accessory (NOT INCLUDED) is as shown in the following section.

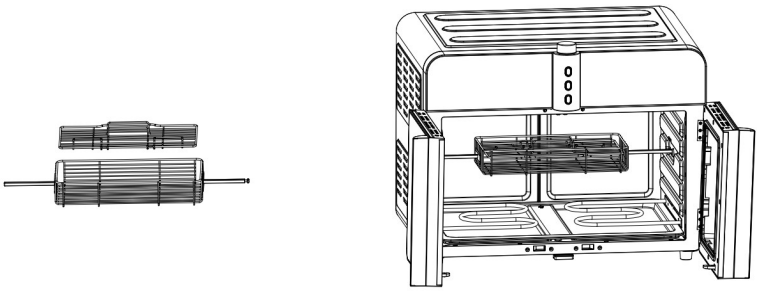

8. The use of the rotisserie fork accessory is as shown in the following section. The rotisserie fork can be used to hold a whole chicken during the cooking operation as shown below:

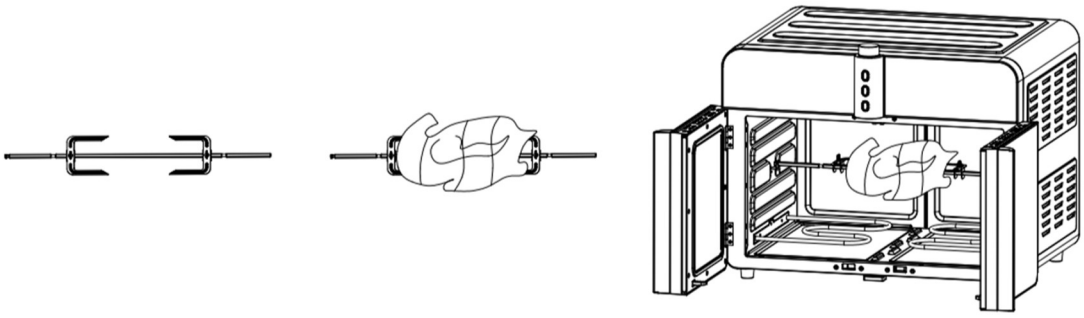

9. The carrying tong can be used to insert and remove the rotisserie fork and drum during or after the cooking operation as illustrated below.

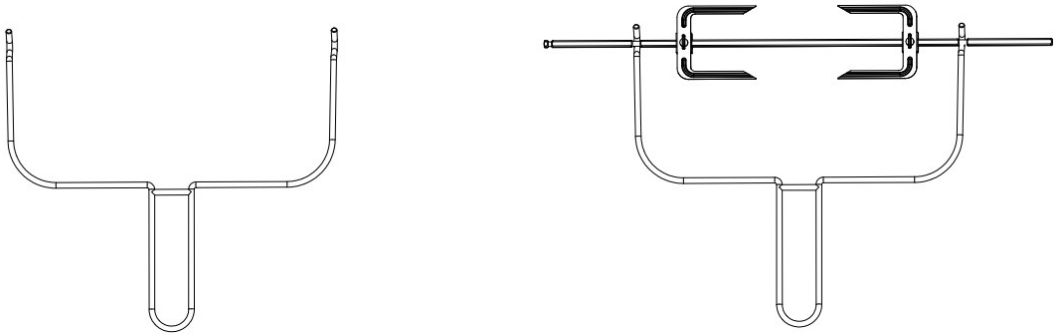

NOTE

* Different accessories may be used for different cooking options.

*After cooking, use insulated oven gloves to adjust or remove any accessories or the spacer.

*Do not let any food touch the highest or lowest position in the oven. Keep a distance of at least 30mm from the oven heating elements. Beware: Food can expand when heated depending on the food being cooked.

*The following image shows the position of the safety switch that enables the normal and safe working of the appliance.

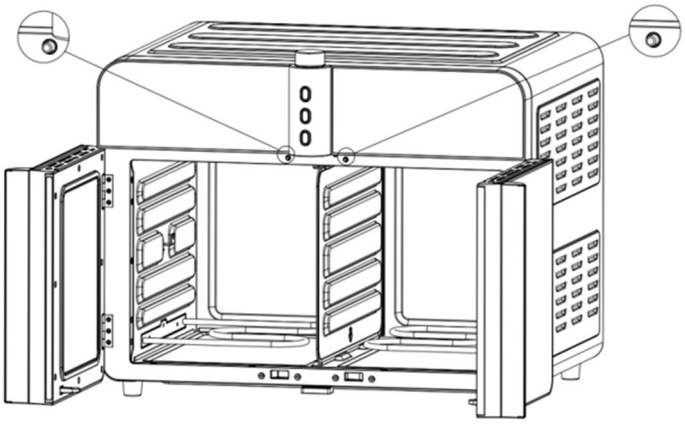

*Only when the door of the appliance is fully closed will the safe working switch be activated, and will the appliance work properly. Never operate the appliance by pressing the switch while the door is open.

BEFORE FIRST USE

1. Please remove all packaging materials carefully and choose a flat area to place the appliance. Ensure all accessories are removed from the packaging before disposing packaging materials.

2. Clean all accessories with warm water, dishwashing liquid or soft lint.

3. Wipe the inside and outside of the appliance with a damp cloth.

4. On first use you may smell a slight odor and smoke fumes. This is due to the production residue burning off the appliance and heating elements upon initial use. This is completely normal and will fade away with use.

OPERATING INSTRUCTIONS

1. When the power is switched on, press and hold the "control knob" button to enter the standby mode. The default operation is based on dual zone setting, meaning independent operation of both the left/right oven cavity.

2. Tap the function menu you want and then press the ⏯ key to enter the heating state.

3. **Lower heating elements:** During operation or after selecting the menu, press the key to turn on or off the lower heating elements. In pre-set cooking modes both upper and/or lower heating elements will work. Operator may turn off the lower heating elements where desired, for example, in situations where excess oils from cooking process falls on the lower heating elements. Use baking foils / paper and pans to prevent oils falling on the lower heating element.

4. **Time setting:** Press the toggle key to enter the time setting state. When the time flashes, set the time by adjusting the knob, the adjustment range is 1 minute - 60 minutes.

5. **Temperature setting:** Press the toggle key to enter the temperature setting state. When the temperature flashes, set the temperature by adjusting the knob in 10°C steps, and the adjustment range is 60°C-220°C.

6. **Return key:** During oven function or after selecting a menu, press the key to return to the previous level or standby state.

7. **Illumination:** During operation or after selecting a menu, press key, the oven light turns on and the illumination lights up and goes out automatically after 60 seconds.

8. **Rotisserie Rotation:** Press the key during cooking operation or after selecting a menu to enable the rotisserie rotation function.

9. **ALL:** Press this key and the indicator lights up, i.e. full cavity heating (single zone operation) is enabled, meaning the left and right control buttons do the same thing.

MENU FUCTION SELECTION

1. **16 Cooking Modes:** The appliance provides 16 different combinations of cooking times and cooking temperatures to suit a variety of cooking needs and styles.

2. **Time and temperature adjustment once a function menu has been selected:** Below are our default menu combinations. You may change the cooking time

and temperature to suit your needs.

Function / Modes	Default temperature	Default time	Adjustable temperature range	Adjustable time range	Remarks
Below is the default dual zone operation (left-right oven independent working) time and temperature setting per cooking mode.					
Chicken wings	200°C	12 minutes	60~220°C	1~60 minutes	
Steak	180°C	20 minutes	60~220°C	1~60 minutes	
Whole Chicken	200°C	30 minutes	60~220°C	1~60 minutes	
Grilled Fish	200°C	25 minutes	60~220°C	1~60 minutes	
Skewer	200°C	20 minutes	60~220°C	1~60 minutes	
Roast meat	200°C	25 minutes	60~220°C	1~60 minutes	
Seafood	180°C	10 minutes	60~220°C	1~60 minutes	
Potatoes	220°C	40 minutes	60~220°C	1~60 minutes	
French fries	220°C	20 minutes	60~220°C	1~60 minutes	
Toast	220°C	5 minutes	60~220°C	1~60 minutes	Turn over bread through cook
Pizzas	160°C	12 minutes	60~220°C	1~60 minutes	
Biscuits	160°C	20 minutes	60~220°C	1~60 minutes	
Cakes	160°C	35 minutes	60~220°C	1~60 minutes	
Popcorn	220°C	10 minutes	60~220°C	1~60 minutes	
Dried fruits	70°C	8 hours	60-70°C	10~480 min.	
Vegetables	180°C	15 minutes	60~220°C	1~60 minutes	
Below is the default single zone operation (ALL setting – single cavity oven) time and temperature setting per cooking mode.					
Chicken wings	200°C	15 minutes	60~220°C	1 to 60 minutes	
Steak	180°C	20 minutes	60~220°C	1 to 60 minutes	
Whole Chicken	200°C	30-45 minutes	60~220°C	1 to 60 minutes	The lower heating element is dimmed by default
Grilled Fish	200°C	25 minutes	60~220°C	1 to 60 minutes	
Skewer	200°C	25 minutes	60~220°C	1 to 60 minutes	The lower heating element is dimmed by default
Roast meat	200°C	30 minutes	60~220°C	1 to 60 minutes	
Seafood	180°C	10 minutes	60~220°C	1 to 60 minutes	
Potatoes	220°C	45 minutes	60~220°C	1 to 60 minutes	
French fries	220°C	18 minutes	60~220°C	1 to 60 minutes	
Toast	220°C	6 minutes	60~220°C	1~60 minutes	Turn over bread through cook
Pizzas	160°C	12 minutes	60~220°C	1 to 60 minutes	
Biscuits	160°C	20 minutes	60~220°C	1 to 60 minutes	
Cakes	150°C	40 minutes	60~220°C	1 to 60 minutes	
Popcorn	220°C	12 minutes	60~220°C	1 to 60 minutes	
Dried fruits	70°C	8 hours	60-70°C	10 to 480 min.	
Vegetables	160°C	15 minutes	60~220°C	1 to 60 minutes	

NOTE

The larger the portion of chicken or food to be baked, the more time and temperature it will take to cook to your desired outcome.

CUSTOM MODE

In the "ALL" mode (single zone setting) without selecting the menu, press the time and temperature keys directly to adjust the desired time and temperature and then press the ⏯ key to enter the heating operation. Only when the "ALL" mode is selected can the single zone setting be used.

COOKING TIME AND TEMPERATURE SETTING

1. After selecting the function menu, if you need to reset the cooking temperature and time, you can change the cooking time and cooking temperature by pressing toggle button.

2. When the digital screen temperature flashes, turn the control knob to increase or decrease the cooking temperature.

3. When the digital screen time is flashing, increase or decrease the cooking time by turning the knob. **Cooking time range:** 1 to 60 minutes (except for the dried fruit cooking mode).

LIGHTING

In standby and at normal operation or with the oven door open, press the button once for the oven light to turn on and illuminate the oven. The light turns off automatically after 60 seconds.

When the door is opened in standby and in operations mode, the light will come on and go out automatically after 60 seconds. Where 60 seconds have not been reached but the door is closed, the light will turn off and the corresponding indicator light will also turn off.

ROTISSERIE ROTATE FUNCTION

In standby or in the operating state, press key once, the indicator light will light up and enter operation - it means the rotation function is on. Press again and the rotating function is turned off.

The use of a roasting fork is shown in the picture below.

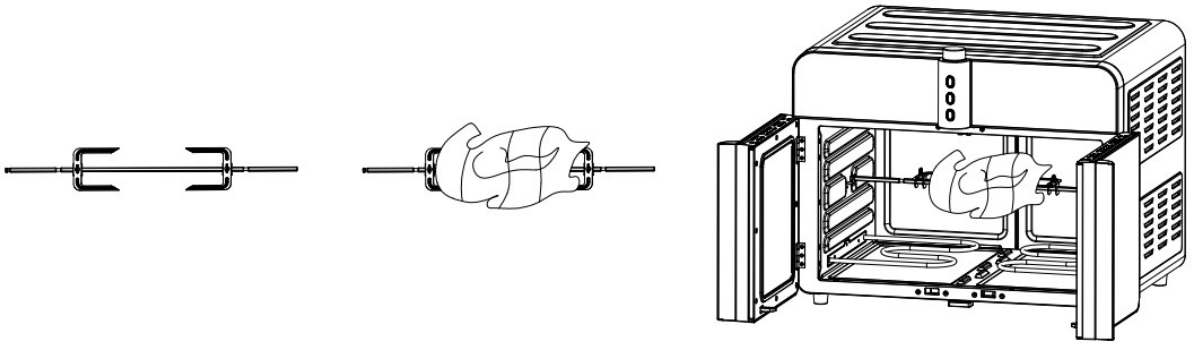

NOTE

The total weight of the chicken should not exceed 3kg. If it exceeds 3kg, please use the rotisserie basket to prevent the chicken from touching the top or bottom of the oven, or from touching the drip tray while turning. Consider using a cooking string to tie the loose ends of the chicken (e.g. legs and wings) to the chicken body to secure loose ends from touching the top or bottom of the oven, or the drip tray.

PAUSE FUNCTION

1. When the door is opened during cooking, the cooker will automatically stop and the digital display will show "OPEN". In this case, only a long press on the "knob" button will respond, the other buttons will be locked. When the door is closed, the cooker will continue with the previous cooking setting.

2. When the appliance is in a cooking operating, press ▷|| key, the appliance will pause working and the indicator light will keep flashing, press ▷|| key again to resume cooking operation.

NOTE

If the door is not closed within 10 minutes after the appliance has been opened for the pause function, the appliance will enter the shutdown state, displaying "black screen" and the machine will be in the shutdown state (the door will also be closed in this state).

During the cooking process, the accessories in use will be very hot and should only be handled with insulated oven gloves. Such accessories must not be touched directly by hand.

TIP

Turn the food regularly or irregularly during cooking to help it cook more evenly and for better results.

COOKING COMPLETE

1. When the appliance has finished working, the digital screen will display "End" and at the same time make a "drip" "drip" "drip" "drip" "drip" sound. The heating elements will stop working and the fan will continue to work for 1 minute until the internal cavity temperature drops.

2. When the left/right separate cavity are in use (dual zone setting), tap the control knob to return the appliance to standby – the separate cavities will black out.

3. Open the oven door, remove the food with insulated oven gloves, and place it on a safe levelled surface.

CAUTION: Do not touch or use your bare hands when removing the drip tray or other accessories from the appliance as this will burn your hands.

TIP: After cooking using the default time and temperature setting, if the ingredients are not quite right, consider putting the food back in the oven and add a few more minutes of cooking.

4. When you have finished cooking, wait for the appliance to cool then turn off the power by pressing the power button and unplug the power cord from the wall.

CLEANING AND MAINTENANCE

NOTE: Always unplug the unit before cleaning and allow it to cool down before cleaning.

*Clean the drip tray, shelves, and any accessories after use.

*Wipe the appliance clean with a soft damp cloth.

*Do not immerse power cords, plugs and the main body of the appliance in water or other liquids to clean them, risking damage, fire, electric shock or injury to others.

*Do not immerse the Dual zone partition / spacer in water or other liquids to clean them, risking damage, distortion, or electric shock.

*After drying, assemble all parts and place them in a ventilated, dry and non-corrosive atmosphere for next use.

CLEANING THE OVEN INTERIOR AND ACCESSORIES.

To clean any spattering that occurs while cooking, wipe with a soft, damp sponge. A non-abrasive liquid cleanser or mild spray solution may be used to avoid buildup of stains. Apply the cleanser to the sponge, not the interior, before cleaning.

The internal metal within the appliance is made from stainless steel. Stainless steel is naturally corrosion-resistant, but it is not immune to rust. Exposure to damaging chemicals like abrasive or acidic cleaning agents (e.g. containing any amount of hydrochloric or sulphuric acid, bleach, or chlorine, vinegar, and such liquids) will cause corrosion. Use of such cleaning agents invalidates your warranty.

PRODUCT SPECIFICATION & PARAMETERS

Model	Rated voltage/rated frequency	Power rating	Capacity
543316	220-240V/50Hz	2600 – 3050W	36L
This product complies with the following standards: IEC 60335-1/IEC 60335-2-9			

APPENDIX 1

TROUBLESHOOTING

Possible Problem	Possible Cause	Solution
The oven does not work	The appliance is not plugged in	Make sure the oven is plugged in
	You have not turned on the oven	Touch the POWER ON/OFF button to power on
	The door is not properly closed	Make sure the door is fully closed
Steam is coming out from the sides or top of the unit or oven door	You are cooking high moisture content foods	This is normal. The sides, top, and door is vented to release steam created from high moisture content foods
White smoke is coming out of the oven	This is the first time using the oven	This is normal upon first use. We suggest setting the oven to the highest temperature and letting it run empty for 18-20 minutes on very first use
	You are cooking greasy food	This is normal when cooking greasy food. This will not affect cooking operation or related processes
	The accessories or heating elements still contain grease or oil residue from your previous use	Ensure the oven and the accessories are properly cleaned after use
Dark smoke is coming out of the oven	Food is burning	Immediately turn off the oven, be careful when removing food from the oven – carefully take the food out of the oven
The ingredients cooked within the oven are not done	Too much food is in the oven at once	Immediately turn off the oven, be careful when you take out the food – the food and accessories may be very hot.
	Setting the temperature too low or the time to short	Set the cooking temperature higher or time longer
	Choosing the incorrect cooking mode / function	Make sure you select the correct cooking mode
Food is cooked unevenly	Ingredients are stacked too closely or are too close to each other during cooking	Make sure the ingredients and food are spread out evenly
	The accessories are incorrectly positioned within the oven cavity	Adjust the oven accessories into the correct and leveled rack positions. Take caution as the accessories may be hot
Food is not crispy after air frying	Ingredients with very high moisture	Spraying or brushing a small amount of oil on food evenly can increase crispiness
Bread is toasted only on	Bread must be manually	Toast mode is a preset to 5-8 minutes

one side	turned during the cooking process to toast both sides of bread	and requires the user to turn the bread mid-way through the cooking process to toast both sides of the bread

FAULT CODES

Code	Code interpretation	Possible causes
E1	Fault in the left cavity temperature sensor.	Temperature sensor open circuit.
E2	Fault in the left cavity temperature sensor.	Temperature sensor short-circuited.
E3	Fault in the right cavity temperature sensor.	Temperature sensor open circuit.
E4	Fault in the right cavity temperature sensor.	Temperature sensor short-circuited.
E5	Circuit board failure.	Communication failure.
E6	Furnace chamber high temperature protection activated.	Cavity temperature sensor temperature above 260°C.

ENVIRONMENTAL PROTECTION FIRST

Correct Disposal of this product:
Your appliance has been designed to run for many years. However, when you decide to replace it, remember to think about how you can contribute to protecting the environment.



This marking indicates that your appliance should not be disposed of with other household wastes throughout the UK or the EU.

To prevent possible harm to the environment or human health from uncontrolled waste disposal, recycle this appliance responsibly to promote the sustainable reuse of material resources.

Your appliance contains valuable materials which can be recovered or recycled.
Leave it at a local civic waste collection point.

WARRANTY

REGISTER WARRANTY

Register your appliance online using the web link below within 14 days of purchase to validate your warranty.

Note the model number and serial number for your product before registering as it will be required in the registration process. The serial number is located at the back of the appliance. Model number is 543316.

Proof of purchase is required for a warranty claim.

www.bgepro.com/warranty

TERMS & CONDITIONS

BridgePro Management Ltd ("BPM").

Limited Warranty: This product is guaranteed for 12 months from the date of original purchase. This guarantee is valid in the UK only.
If any defect arises due to faulty materials or workmanship, the faulty products must be returned to the place of purchase. Refund or replacement is at the discretion of the retailer.

The following conditions apply:

- The product must be returned to the retailer with proof of purchase or a receipt.
- The product must be installed and used in accordance with the instructions contained in this instruction guide.
- It must be used only for domestic purposes.
- It does not cover wear and tear, damage, misuse or consumable parts.
- The product has limited liability for incidental or consequential loss or damage.

To validate your warranty, please visit www.bgepro.com/support/warranty/ and register with us online. Warranty is only valid with proof of purchase or receipt.

This product warranty is available to consumers only.
You are a consumer if you purchased the product at retail for personal, family, or household use. Except as otherwise stated under applicable law, this warranty is not available to retailers or other commercial purchasers and owners.
This product warranty is void if the product is used for situations other than a single-family household use or subjected to any voltage and wave forms other than as specified in this instruction manual (e.g. 220V-50Hz).

Transportation charges: Transportation charges for products under this warranty, subject to repair or replacement, shall be borne by the purchaser.

Conditions: Service centers or retail stores do not have the right to alter, modify, or in any way change the terms and conditions of this warranty.
Warranty registration is not necessary but is encouraged to validate product warranty.

About your warranty: Most warranty repairs or replacements are handled routinely but sometimes requests for warranty services may not be appropriate, e.g. warranty services would NOT apply if the product damage occurred because of misuse, lack of routine maintenance, shipping, handling, 3rd party warehousing, or improper installation. Similarly, warranty is void if the serial number on the product has been removed or the product has been altered or modified.

Normal wear: This warranty does not cover normal wear of any parts or damage resulting from any of the following negligent use or misuse of the product:

- Improper voltage or current,
- Use contrary to the operation instructions,
- Deviation from the instructions regarding storage and transportation, or
- Repair or alteration by any 3rd party.

This warranty does not cover Acts of God such as fire, flood, hurricanes, and tornados.
BPM shall not be liable for any incidental or consequential damages by the breach of any express or implied warranty.
Except to the extent prohibited by applicable law any implied warranty of merchantability or fitness for the particular purpose is limited in duration of this warranty.

DECLARATION OF CONFORMITY

Manf: BRIDGEPRO MANAGEMENT LTD, 85 GREAT PORTLAND STREET, LONDON W1W 7LT

EU Rep: Authorised Rep Compliance Ltd., Ground Floor, 71 Lower Baggot Street, Dublin, D02 P593, Ireland. www.arccompliance.com

This declaration of conformity is issued under the sole responsibility of the manufacturer BridgePro Management Ltd.

Product Name	**Product Type**	**Product Part Number**
BridgePro 36L Digital Air Fryer Dual Zone Oven	Air Fryer Oven	543316

Note: Serial number is stated on each product rating label.

The object of the declaration as described above is in conformity with the relevant Union harmonisation legislation:

Legislation	**Title**
2006/42/EC	Machinery Directive
2014/35/EU	Low Voltage Directive (LVD)
2014/30/EU	EMC Directive
2011/65/EU	RoHs Directive

For the evaluation of compliance, the following standards have been applied:

Machinery Directive	BS EN ISO 12100:2010 BS EN 809:1998+A1:2009	LVD	EN 60335-1:2012+A11+A13+A1+A14+A2+A15 EN 60335-2-9:2003+A1+A2+A12+A13 EN 62233:2008 AfPS GS 2019:01 PAK, EK1 527-12 Rev.2
EMC	EN IEC 55014-1:2021 EN IEC 55014-2:2021 EN IEC 61000-3-2:2019+A1 EN 61000-3-3:2013+A1+A2	RoHs	ROHS Directive (EU) 2015/863 2011/65/EU
EMF	EN 62233:2008	Packaging	ISTA 3A:2018

I hereby declare that the equipment named above has been designed to comply with the relevant sections of the above referenced standards. The unit complies with all relevant essential requirements of the Union harmonisation legislation.

Signed for an on behalf on BridgePro Management Ltd.

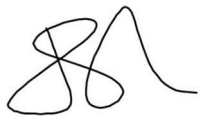

Director

London, England, 01/01/2025

NOTES