BRIDGE PRO

380 m^3/h

AIR PURIFIER
SMART, WIFI, HEPA FILTER

360° Surround Air Intake for Rapid Purification

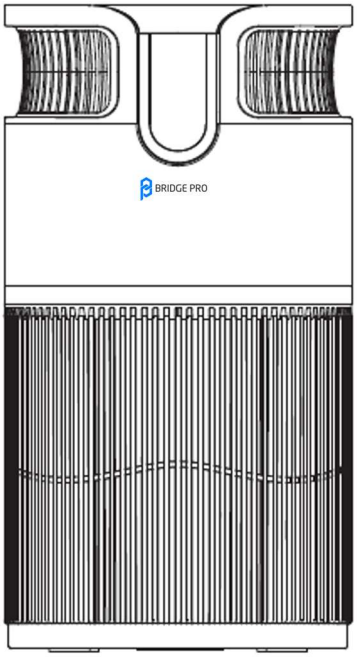

543324

24V DC, 38W

When using electric appliances basic safety precaution should always be followed. Do not use BridgePro Air Purifier until you have read this manual thoroughly. Please keep this instruction manual in a safe place.

Visit BridgePro Online Store **www.bgepro.com/shop/**

CE UKCA

TABLE OF CONTENTS

IMPORTANT SAFEGUARDS 3
PARTS IDENTIFICATION 6
USING YOUR AIR PURIFIER 6
HOW TO USE YOUR AIR PURIFIER 6
AIR QUALITY INDICATOR LIGHTS AND CORRESPONDING DISPLAYS 8
FILTER INSTALLATION 8
WiFi Connection Guide (if applicable) 9
CLEANING & MAINTENANCE 11
STORAGE 11
ENVIROMENTAL PROTECTION 11
TROUBLE SHOOTING 12
TECHNICAL SPECIFICATION 13
TERMS & CONDITIONS 14
DECLARATION OF CONFORMITY 15
NOTES 16

IMPORTANT SAFEGUARDS

Please read these instructions carefully before use!

This product is intended for use at home or in similar locations only.

READ ALL INSTRUCTIONS BEFORE USE: SAFETY INSTRUCTIONS

Warning: Please be alert to the risk of personal danger, injury, and property damage.

Thank you for purchasing this air purifier. To avoid potential harm or property damage, please pay attention to the following safety precautions. If the machine or power cord is damaged; it must be replaced or be repaired by a qualified technician to prevent danger.

1. This appliance shall not be used by children. Keep the appliance and its accessories out of reach of children.

2. This machine should not be used by individuals with physical, sensory, or mental disabilities, or by those lacking relevant experience and skills (including children), unless they receive guidance or instructions on the product's use from a responsible person ensuring safety.

3. Children shall not play with the appliance.

4. Ensure the machine is disconnected from the power supply before installation, maintenance, or transportation.

5. Do not touch the power plug with wet hands to avoid electric shock.

6. Turn off and unplug the machine before replacing the filter.

7. Verify that the voltage marked on the back or bottom of the product matches the local voltage before connecting the product to the power supply.

8. If the machine or power cord is damaged, it must be replaced or repaired by a qualified technician to prevent danger.

9. Do not damage the power cord or plug. Do not bind the power cord while using

the machine. Using damaged power cord may result in electric shock, short circuits, or fire hazards.

10. Do not modify, excessively twist, pull, or place heavy objects on the power cord or plug.

11. Hold the plug when unplugging, not the cord, to avoid short circuits or damage the cord, leading to fire or electric shock hazards.

12. If the plug or power cord is damaged or the plug is not fully inserted into the socket, it may cause electric shock, overheating, or even a fire hazard.

13. If the power cord or plug becomes unusually hot, immediately turn off the machine and consult a qualified technician to prevent danger.

14. If the machine emits a burnt smell, makes unusual sounds or vibrations, or exhibits any other abnormal phenomena or malfunctions, immediately turn off the machine and consult a qualified technician.

15. Regularly clean the power plug to prevent dust and moisture, which can cause insulation damage and lead to electric shock or fire.

16. Do not use damaged plugs or loose power sockets.

17. Do not disassemble or modify the machine without authorization, as this may result in electric shock, malfunction, or fire hazards.

18. Avoid using the machine in high temperature, humid, or wet environments, as it may become damp and cause electric leakage, resulting in electric shock or fire hazards.

19. Do not use the machine in places with oily particles, such as kitchens, as this can reduce the lifespan of the air purifier filter or cause machine malfunctions.

20. Do not use the machine during indoor fumigation with pesticides.

21. Do not use solvents such as benzene or thinners, or any acidic substances whatsoever to clean this machine, and avoid contact with insecticide sprays. Otherwise, the machine may crack, resulting in damage, or even cause a short circuit, leading to electric shock or fire accidents.

22. Do not place or insert fingers or foreign objects into the air intake and outlet, as it may come into contact with internal components and cause electric shock or damage.

23. Do not allow water, any other liquids, volatile substances, or combustible materials such as tobacco or sparks to enter the machine, as this may cause fire accidents.

24. This machine cannot replace normal ventilation, daily vacuuming, or exhaust equipment.

25. Maintain at least 10 cm of space around the front, back, and sides, and 30 cm above the product.

26. Do not place objects on top of the product or sit on it.

27. Keep at least 200 cm away from radio wave devices to avoid interference, such as televisions, radios, and radio-controlled clocks.

28. Place the machine on a stable, flat surface, and avoid soft surfaces like carpets.

29. For indoor use only. Keep away from rain.

30. Unplug the power when not in use for a long time to avoid insulation deterioration, fire, electric shock, or short circuits.

31. This appliance is intended for household use only; any other (industrial or commercial) use is not permitted.

32. For safe operation, assemble and use the appliance only according to the instructions in the manual.

PARTS IDENTIFICATION

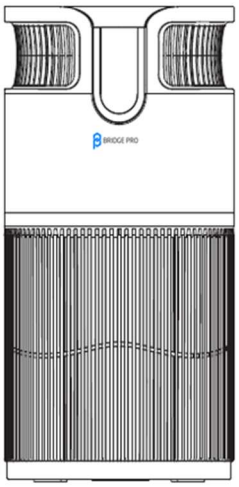

Main unit



Instruction Manual

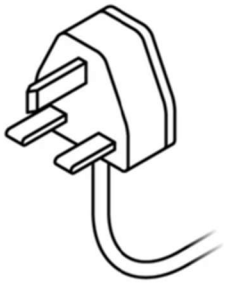

Power Cable

Package Content

USING YOUR AIR PURIFIER

Instructions for using the air purifier.

HOW TO USE YOUR AIR PURIFIER

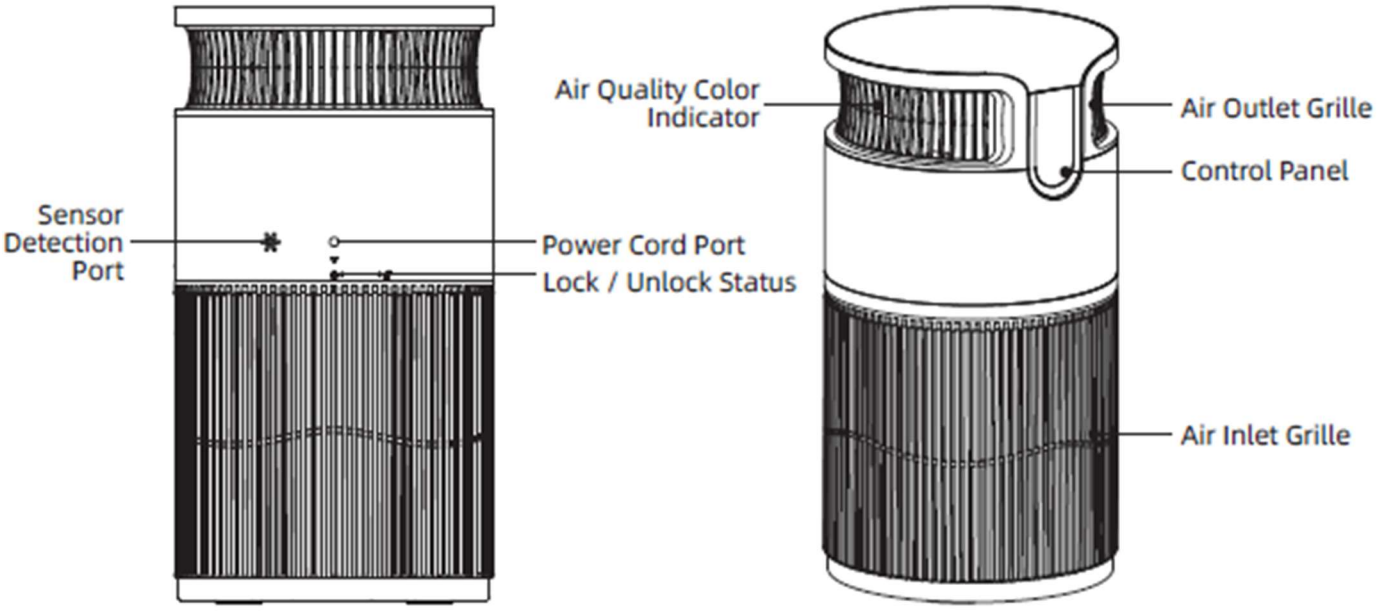

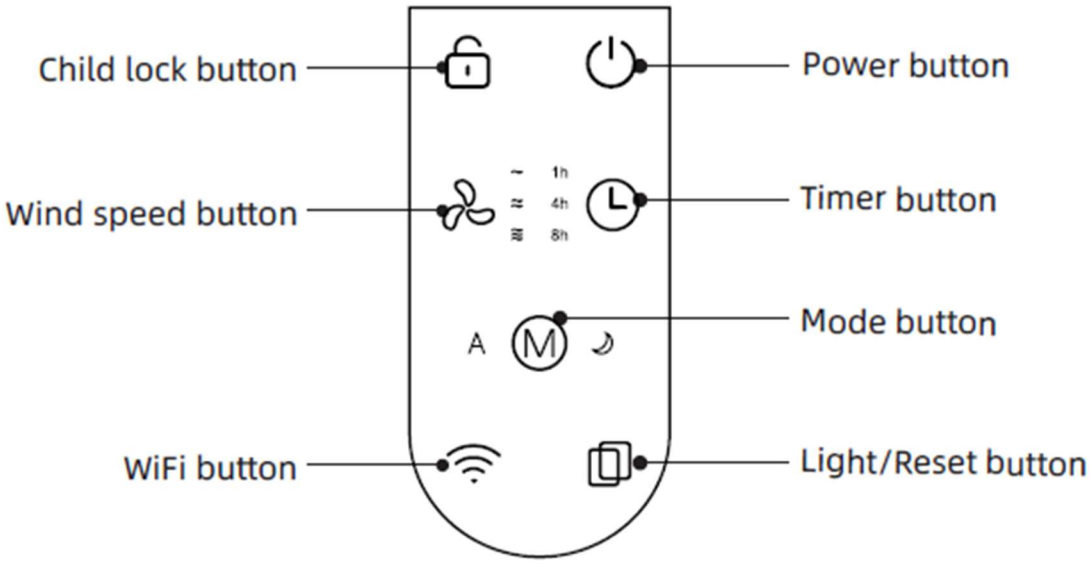

Power	Press the Power button (“ding”) – red indicator shows standby; white when operating.
Mode	Default mode: Auto. Press Mode to switch between Sleep “ ” and Auto “A”.
Wind speed	Press Wind Speed to cycle between levels 1–2–3-1.
Timer	Press Timer to set 1H–4H–8H–Cancel.
Child lock	Press and hold for 2 seconds (ding); the indicator light turns on, and the child lock is on. Press and hold again for 2 seconds (ding); the indicator light turns off, and the function is off.
Light/Reset	After 1600 hours of operation, the machine will remind you to replace the filter. • The filter icon’s red indicator light will turn on and flash once per second. • Press and hold the Filter Reset button for 5 seconds (beep) to reset the filter timer. • Press the Reset button (beep) to turn the top air quality ambient

	light on or off.
	Press and hold the WIFI button for 3 seconds to enter pairing mode. • The WIFI icon will start blinking. After successful pairing, the WIFI icon remains steadily on. • Note: After pairing is successful, if you press and hold the WIFI button for 3 seconds again, the binding will be cancelled and the device will need to be re-paired.

AIR QUALITY INDICATOR LIGHTS AND CORRESPONDING DISPLAYS

Blue	(PM 2.5=0~50)	Excellent
Green	(PM 2.5=51~100)	Good
Purple	(PM 2.5=101~150)	Moderate
Red	(PM 2.5=151~500)	Poor

*PM - particulate matter

FILTER INSTALLATION

For first-time use, follow these steps to install the filter correctly.

1. Remove all packaging and place the unit on a dry, flat surface.
2. Hold the upper body with both hands, clamp the base with your legs, and twist open.
3. Rotate the arrow on the back from “Lock” to “Unlock” and lift the top section.
4. Remove plastic wrapping from the filter.
5. Reassemble by aligning the arrows and turning to “Lock.”

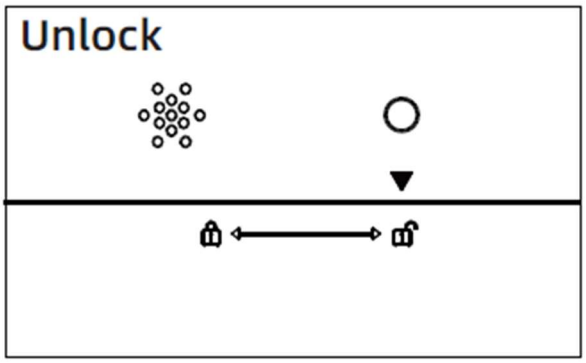

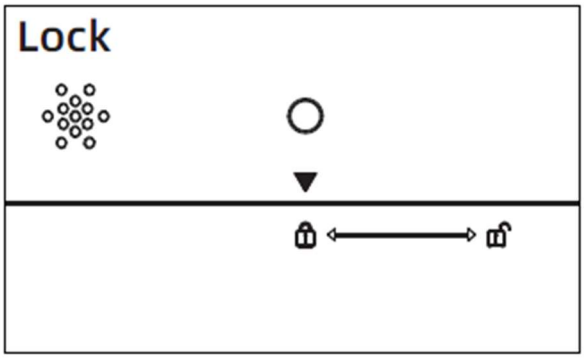

WiFi Connection Guide (if applicable)

APP Connection
Turn on Bluetooth for quick connection during network setup.

1.Download and install
the "Tuya" app on your phone.

Tuya

2.Open the "Tuya" app, register, and log in.



3. Add device
Press and hold the WIFI button for 3 seconds to enter network configuration mode; at this time, the WIFI indicator light will flash.

In the app, tap
Add Device → Small Appliances → Air Purifier (Bluetooth + WiFi).

After the network configuration is successful, repeating the setup operation will unbind the device.

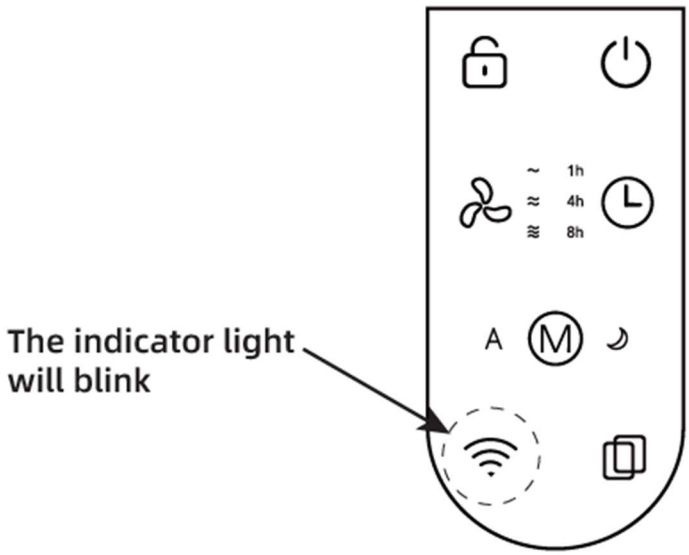

4. Connect Network
Follow the app prompts to enter WiFi password



5. Add Complete
After successful network connection, the app will show that the device is added. Click the icon to enter the operation interface for app control

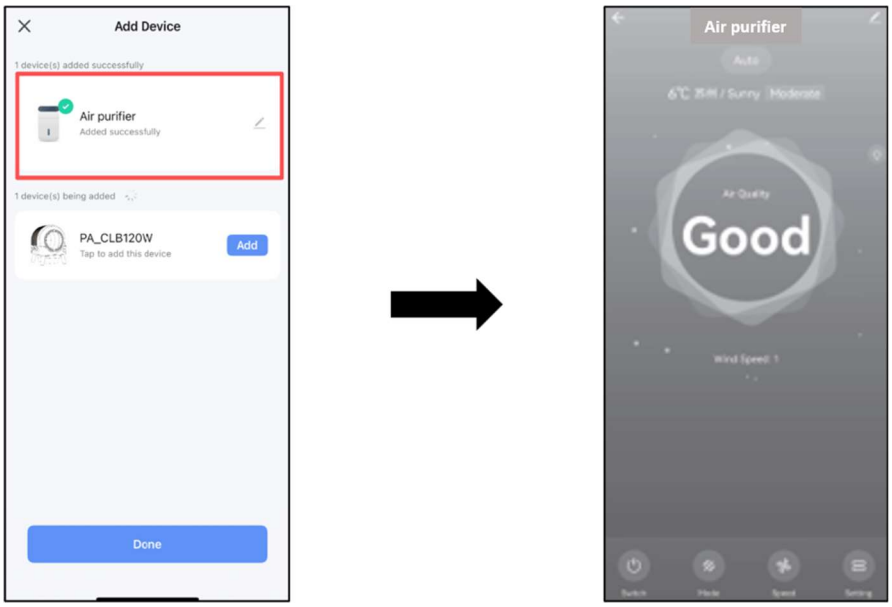

CLEANING & MAINTENANCE

The main unit can be wiped clean with a dry or wet cloth. Do not immerse it in water or other liquids. Do not use sharp objects or corrosive liquid solvents (such as alcohol, gasoline, acetone) to clean this product.

STORAGE

- Clean the machine as described then let it dry thoroughly.
- We recommend storing the device in its original packaging!
- Store the appliance in a well-ventilated, dry place out of the reach of children.
- For long term storage, ensure the product is clean before storing away.
- Store in a dry and ventilated space to prevent moisture build up within the electrical components.

ENVIROMENTAL PROTECTION

Correct disposal of this product:

Your appliance has been designed to run for many years. However, when you decide to replace it, remember to think about how you can contribute to protecting the environment.



This marking indicates that your appliance should not be disposed of with other household wastes throughout the UK or the EU. To prevent possible harm to the environment or human health from uncontrolled waste disposal, recycle this appliance responsibly to promote the sustainable reuse of material resources. Your appliance contains valuable materials which can be recovered or recycled. Leave it at a local civic waste collection point.

TROUBLE SHOOTING

Issues	Possible Causes	Possible Solutions
Machine can't turn on	Power plug inserted into the power supply	Unplug the power plug and then plug it back in
	The power plug or cord is damaged	Contact with a qualified technician.
The fan doesn't work	The machine is not turned on	Insert the power supply, and turn on the machine again
	The machine is put on an uneven surface	Place the machine on a flat place
	The plastic packaging on the filter has not been removed	Remove the plastic packaging before use
	Motor damage	Contact with a qualified technician.
	Loose or foreign particles inside the machine	
	The motor is loose	
Excessive noise during operation	The machine is put on an uneven surface	Place the machine on a flat place
	The plastic packaging on the filter has not been removed	Remove the plastic packaging before use
Device running fine but with reduced airflow	Machine outlet was blocked	Adjust the machine's position to ensure adequate surrounding space and ventilation
	Filter is not replaced	Verify if it's time to replace the filter as prompted
The filter warning light is on	The filter has reached the end of its lifespan	Replace one set of new filters

TECHNICAL SPECIFICATION

PRODUCT SPECIFICATION	
Model	543324
Rated voltage	DC 24V
Rated power	38 W
CADR (Partial)	380 m^3/h
Adapter Specifications	Input: AC 100-240V ~ 50/60 Hz Output: 24V / 2A
Dimension	250 x 250 x 467 mm
Weight	3.2 kg
Sound	<66 dB(A)
Filter (**Part number 543324-1**)	Electrostatic Cotton + H13 HEPA + Activated Carbon Sponge (3-in-1)
Wifi	TUYA
Features	Auto mode dust sensor Wind speed: 1-3 levels Four colour: PM2.5 Indicator Light Sleep mode Timer: 1-8 hours Child lock Touch control panel Filter replacement reminder 3-in-1 filter

TERMS & CONDITIONS

BridgePro Management Ltd ("BPM").

Limited Warranty: This product is guaranteed for 12 months from the date of original purchase. This guarantee is valid in the UK only.
If any defect arises due to faulty materials or workmanship, the faulty products must be returned to the place of purchase. Refund or replacement is at the discretion of the retailer.

The following conditions apply:

- The product must be returned to the retailer with proof of purchase or a receipt.
- The product must be installed and used in accordance with the instructions contained in this instruction guide.
- It must be used only for domestic purposes.
- It does not cover wear and tear, damage, misuse, or consumable parts.
- The product has limited liability for incidental or consequential loss or damage.

To validate your warranty, please visit www.bgepro.com/support/warranty/ and register with us online. Warranty is only valid with proof of purchase or receipt.

This product warranty is available to consumers only.
You are a consumer if you purchased the product at retail for personal, family, or household use. Except as otherwise stated under applicable law, this warranty is not available to retailers or other commercial purchasers and owners.
This product warranty is void if the product is used for situations other than a single-family household use or subjected to any voltage and wave forms other than as specified in this instruction manual (e.g. 220V-50Hz).

Transportation charges: Transportation charges for products under this warranty, subject to repair or replacement, shall be borne by the purchaser.

Conditions: Service centers or retail stores do not have the right to alter, modify, or in any way change the terms and conditions of this warranty.
Warranty registration is not necessary but is encouraged to validate product warranty.

About your warranty: Most warranty repairs or replacements are handled routinely but sometimes requests for warranty services may not be appropriate, e.g. warranty services would NOT apply if the product damage occurred because of misuse, lack of routine maintenance, shipping, handling, 3rd party warehousing, or improper installation. Similarly, warranty is void if the serial number on the product has been removed or the product has been altered or modified.

Normal wear: This warranty does not cover normal wear of any parts or damage resulting from any of the following negligent use or misuse of the product:

- Improper voltage or current,
- Use contrary to the operation instructions,
- Deviation from the instructions regarding storage and transportation, or
- Repair or alteration by any 3rd party.

This warranty does not cover Acts of God such as fire, flood, hurricanes, and tornados.
BPM shall not be liable for any incidental or consequential damages by the breach of any express or implied warranty.
Except to the extent prohibited by applicable law any implied warranty of merchantability or fitness for the particular purpose is limited in duration of this warranty.

DECLARATION OF CONFORMITY

Manf: BRIDGEPRO MANAGEMENT LTD, 167–169 Great Portland Street, London, W1W 5PF

EU Rep: Authorised Rep Compliance Ltd., Ground Floor, 71 Lower Baggot Street, Dublin, D02 P593, Ireland. www.arccompliance.com

This declaration of conformity is issued under the sole responsibility of the manufacturer BridgePro Management Ltd.

Product Name	Product Type	Product Part Number
BridgePro AIR PURIFIER SMART, WIFI, HEPA FILTER	AIR PURIFIER	543324 (AP380)

Note: Serial number is stated on each product rating label.

The object of the declaration as described above is in conformity with the relevant Union harmonisation legislation:

Legislation	Title
2014/35/EU	Low Voltage Directive (LVD)
2014/30/EU	EMC Directive
2011/65/EU	RoHs Directive

For the evaluation of compliance, the following standards have been applied:

LVD	EN 60335-2-65:2003+A1:2008+A11:2012+A2:2022+A12:2022 EN 60335-1-2012+A11:2014+A13:2017+A1:2019+A14:2019+A2:2019+A15:2021+A16:2023 EN 62233:2008	RoHs	ROHS Directive (EU) 2015/863 2011/65/EU
EMC	EN 61000-3-3:2013+A1:2019+A2:2021 EN IEC 55014-1:2021 EN IEC 55014-2:2021 EN IEC 61000-3-2:2019+A1:2021+A2:2024		

I hereby declare that the equipment named above has been designed to comply with the relevant sections of the above referenced standards. The unit complies with all relevant essential requirements of the Union harmonisation legislation.

Signed for an on behalf of BridgePro Management Ltd.

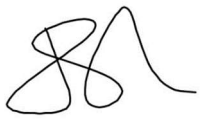

Director

London, England, 01/06/2026

NOTES