BRIDGE PRO

PORTABLE AIR FRYER

3L + 5.5L DIGITAL AIRFRYER

Space-saving portable cooker for tasty, crispy meals anytime.



543322

When using electric appliances basic safety precaution should always be followed. Do not use BridgePro Portable Air Fryer until you have read this manual thoroughly. Please keep this instruction manual in a safe place.

Visit BridgePro Online Store **www.bgepro.com/shop/**
Download our Recipe Cookbook at **www.bgepro.com/bridgepro-air-fryer-recipes/**

UK CA CE

TABLE OF CONTENTS

IMPORTANT SAFEGUARDS 3
GETTING TO KNOW YOUR PORTABLE AIR FRYER 8
- MAIN COMPONENTS 8
- 3L + 5L AIR FRYER CONVERSION 9
- BEFORE FIRST USE 9
- PREPARING FOR FIRST TIME USE 10
- AIR FRYING 10
- CONTROL PANEL: HOW TO USE 13

QUICK MENU FUNCTIONS 14
CLEANING & STORAGE 16
TROUBLESHOOTING 18
WARRANTY 19
- REGISTER WARRANTY 19

TERMS & CONDITIONS 20
DECLARATION OF CONFORMITY 21
NOTES 22
NOTES 23

IMPORTANT SAFEGUARDS

Always follow basic safety precautions when using your Air Fryer.

READ ALL INSTRUCTIONS BEFORE USE

- **Unplug** the appliance from electrical outlet when not in use and before cleaning. Allow the appliance to cool down before cleaning or handling, or putting on or taking off parts.

- **Do not** touch hot surfaces without using heat protective gloves. To avoid burns, use extreme caution when removing hot food, accessories or disposing of hot grease.

- When adding or removing food or utensils from the cavity, ensure they do not touch the heating elements. Insulated air fryer gloves should be worn to avoid burns from the heat.

- During air frying, hot steam is released through the air outlet openings, keep your hands and face at a safe distance from the steam and from the air outlet openings. Also, be careful of hot steam and air when you remove the glass container from the air fryer body.

- Ensure that your power supply can carry no less than 13A.

- The appliance should be placed on a horizontal or stable tabletop when in use.

- **Do not** immerse the power cord, plug or any parts of the appliance in water or other liquids to prevent against electrical hazard or the shorting of electrical circuitry. Do not wash the heating element under the tap, or in a dishwasher, to avoid damage or danger.

- **Do not** cover the air inlets, outlets, and sockets on the appliance during work.

- **Do not** operate any appliance with a damaged cord or plug. If the appliance is dropped or damaged, please replace the product.

- To avoid **potential injury**, do not use accessories or attachments not provided for the unit.

- **Do not** use outdoors or in remote unattended areas.
- **Do not** use or place on or near a hot gas or electric burner.
- **Do not** use this appliance for other than the intended use.
- To avoid **potential hazards**, do not put the product next to or use by children.
- **Do not** let the cord hang over the edge of a surface where the potential of children or pets' interaction is present.
- This appliance is not intended for use by persons (including children) with reduced physical, sensory, or mental capabilities, or lack of experience and knowledge, unless they are supervised or given instruction concerning use of the appliance by a person responsible for their safety.
- Children should be supervised to ensure that they do not play with the appliance.
- **Extreme caution** should be taken when using containers constructed of materials other than metal or glass in the appliance.
- **Do not** store any materials other than manufacturers recommended accessories in this appliance when not in use.
- **Do not** place any of the following materials in this appliance: cardboard, plastic, paper, or similar.
- **Do not** place oversized foods and utensils into this appliance as they may create a risk of fire, electrical shock, or shorting of electrical circuitry.
- **Do not** place on plastic, wooden boards or any other surface that is not heat and wear resistant.
- **Do not** use this appliance for any purpose other than as described in this manual.

- **A fire or shorting of electrical circuitry** may occur if the appliance is covered or touching flammable materials such as curtains, draperies, or walls when in operation.

- **Do not** plug in the power supply or operate the control panel with wet hands. Do not plug into a multi-plug device.

- **Do not** place anything on top of the appliance when in use or not in use.

- **Warning:** To avoid possibility of fire, never leave the appliance unattended during use. Use recommended temperature settings for all function.

- **Do not** clean with metal scouring pads. Pieces can break off the pad and touch electrical parts, creating risk of electrical shock, or shorting of electrical circuitry.

- **Do not** clean with acidic cleaning substances and solutions. ACIDIC SUBSTANCES could disclosure the appliance internal surface and lead to corrosion and rust formation.

The internal metal within the appliance is made from stainless steel. Stainless steel is naturally corrosion-resistant, but it is not immune to rust. Exposure to damaging chemicals like abrasive or acidic cleaning agents (e.g. containing any amount of hydrochloric or sulphuric acid, bleach, or chlorine, vinegar, and such liquids) will cause corrosion. Use of such cleaning agents invalidates your warranty.

- **Do not** rest cooking utensils or baking dishes on the glass container. If the surface of the glass is scratched, this can cause the glass to break.

- **Do not** operate the appliance under a wall cabinet or remote areas such as a garage. When storing the appliance in remote areas, always unplug the unit from the electrical outlet.

- Ensure the appliance is placed at least approximately 10 cm from walls or on other apparatus. Do not operate inside a wall cabinet.

- Check if the voltage indicated on the appliance corresponds to the local main voltage before connecting the appliance.

- If the pre-set time is too long during a cooking operation, the food will burn and smoke may be released from the vents. Immediately cut off the power and clean food waste and grease from the glass container and other accessories.

- When the unit is not in use and before cleaning, press the power button off and remove the air fryer from the electrical outlet.

- Do not place the appliance near hot gas or electric burner.

- Do not cover the glass container with metal foil. This will cause overheating of the appliance.

- Oversize foods or metal utensils must not be inserted in the appliance as they may cause fire or risk electrical shock.

- **NEVER** leave the air fryer unattended while in use.

- Always re-insert the food tray into the air fryer, inside the glass container. Do not fill the pan with oil as this may cause a fire hazard.

- Always put the ingredients to be cooked in the basket, avoiding contact with the heating elements.

FOR HOUSEHOLD USE ONLY
SAVE THESE INSTRUCTIONS

NOTE

- **You may smell a slight odor and smoke on first use. This is due to the production residue burning off the appliance and heating elements upon initial use. This is completely normal and will fade away with use.**

- The manufacturer or retailer is not responsible for any problems arising from incorrect use by the customer.

- **Do not** unplug the appliance immediately after cooking to avoid damage to the appliance due to increased residual temperature inside the appliance.

- After cooking and the appliance has cooled down, unplug it from the mains, clean the glass container, clean the waste on the surfaces, and place it in a ventilated, dry, and non-corrosive environment.

- This air fryer uses a short power supply cord to reduce the risk of entangling or tripping. Use extension cords with care. The marked electrical rating of the extension cord must be as great as the rating of the air fryer.

Food Suitability Guidance: The appliance is safe for cooking items such as sausages. However, sausages in particular can release hot oil during cooking, which may lead to increased splatter and smoke in compact air-fryer units. For this reason, care should be taken when cooking sausages. Users can cook a variety of meats successfully with this appliance.

GETTING TO KNOW YOUR PORTABLE AIR FRYER

By using the all-new 360°C HOT AIR CIRCULATION technology and using a top heating elements, this appliance delivers delicious, fast, easy, and healthy cooking result.

MAIN COMPONENTS

Main Unit (with attached power cord)

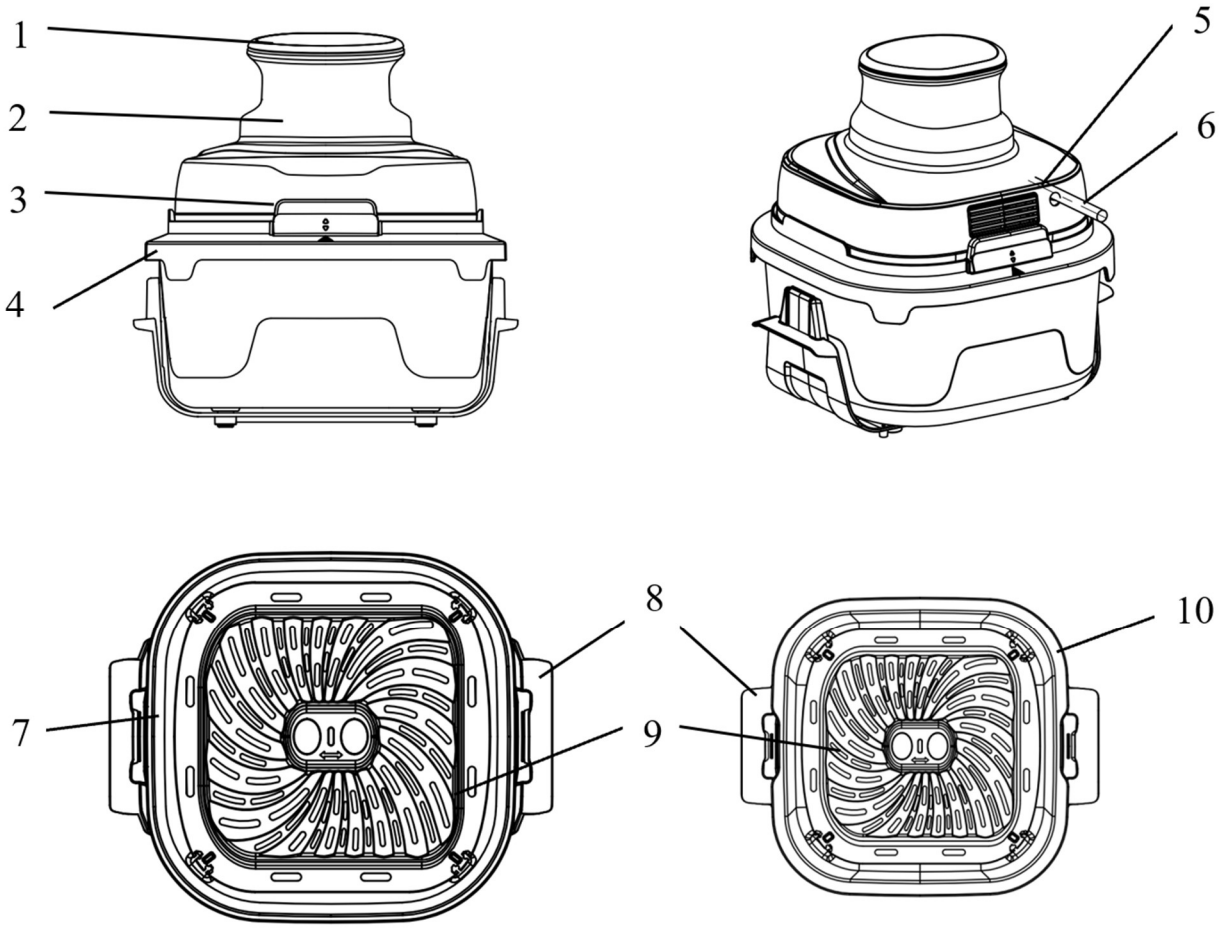

1. Control Panel	2. Air Fryer Body	3. Side Lock Button	4. Adapter Ring	5. Air Outlet
6. Power Outlet	7. 5.5L Glass Container Extension	8. Glass Container Handle	9. Food Tray	10. 3L Glass Container

3L + 5L AIR FRYER CONVERSION

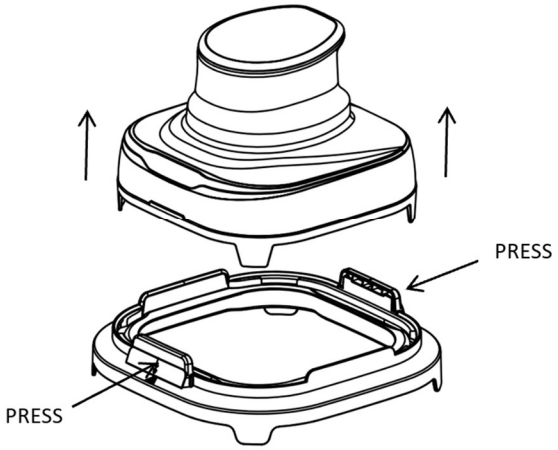

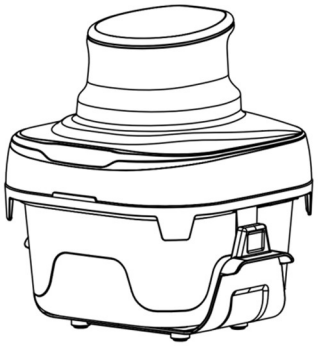

Press down on both side lock buttons on the adapter ring to separate the adapter ring from the air fryer body.

Place the air fryer body on the 3L glass container to complete the conversion.

BEFORE FIRST USE

1. Read the instructions included in this manual.

2. Remove all packaging materials carefully and choose a flat area to place the appliance. Ensure all accessories are removed from the packaging before disposing packaging materials.

3. The rating label at the base of the glass container contains key information about the appliance. Keep this label in place but remove any other sticker or labels from the appliance.

4. Thoroughly clean the glass containers with hot water, detergent, and a non-abrasive, non-acidic cleaning agents. **Note: You can clean accessories in the dishwasher. You cannot clean the air fryer body (containing the heating elements in the dishwasher).** Clean all accessories with warm water, dishwashing liquid, and soft lint.

5. Wipe the inside and outside of the appliance with a moist cloth. This appliance works on hot air. Do not fill the glass container with oil or frying fat.

6. On first use you may smell a slight odor and smoke fumes. This is due to the

production residue burning off the appliance and heating elements upon initial use. This is completely normal and will fade away with use.

7. Put the food tray into the glass container.

8. Use the handle to connect the glass container with the air fryer body.

PREPARING FOR FIRST TIME USE

1. Place the appliance on a stable, horizontal, and level surface.

2. Place the appliance on a heat-resistant surface.

3. Place the food tray correctly into the glass container.

4. Do not put anything on top of the appliance. This disrupts the airflow and affects the hot air frying result.

AIR FRYING

- Plug in the power cord into a grounded wall socket.
- Never connect this appliance to an external timer switch or a multi plug to avoid a hazardous situation.
- Carefully pull the glass container away from the air fryer body.
- Place the ingredients in the glass container above the food tray.
- Use the glass container handle to slide it under the air fryer body.
- Never use the glass container without the food tray in it. When the appliance is heating ingredients, use an oven glove to open the drawer. The side wall and edge of the glass container and air fryer body can become very hot.
- **Note: If required, you can let the appliance preheat without any ingredients inside. In such a case, turn the timer to 3 minutes and wait until the heating-up light goes out (after approximately 3minutes). Then fill the container before staring a cooking operation.**

- Some ingredients require shaking halfway through the preparation time. To shake the ingredients, pull the glass container out of the air fryer body by the glass container handle and shake the content. Then slide the glass container back under the air fryer body.

- When you hear the timer bell, the set preparation time has elapsed. Pull the glass container from under the air fryer body and place it on a heat-resistant surface. You can also switch off the appliance manually. To do this, press the start / stop button.

Tip: Regularly check the cooking process and ingredients during cooking. If the ingredients are not cooked, place the glass container back under the air fryer body and set the timer to extra cooking minutes. Steam may escape from the glass container during cooking.

Shaking ingredients in the glass container halfway through the preparation time can help prevent unevenly cooked ingredients.

Add some oil to fresh potatoes for a crispy result.

Food Suitability Guidance: The appliance is safe for cooking items such as sausages. However, sausages in particular can release hot oil during cooking, which may lead to increased splatter and smoke in compact air-fryer units. For this reason, care should be taken when cooking sausages. Users can cook a variety of meats successfully with this appliance.

You can use the air fryer to reheat ingredients. To reheat ingredients, set the temperature to 150 °C for up to 10 minutes.

The accessible surfaces may become hot during use



Immediately unplug the appliance if you see dark smoke coming out of the appliance. Wait for the smoke emission to stop before you remove the glass container from the appliance.

CONTROL PANEL: HOW TO USE



A) Power Button:

Press button turn ON / OFF.

B) Rapid Cool Button:

Press button to START / STOP cooking.

C) Time / Tem Button:

Press button to toggle through time and temperature. The time and temperature will be displayed alternatively every 5 seconds.

D) Menu Button:

Press "**MENU**" to toggle through menu functions.

E) Time Increase / Decrease Button:

Press , the min light will flash, and press the / button to increase/decrease to a maximum of 60 minutes (hold button for rapid increase/decrease).

F) Temp Increase / Decrease Button:

Press , the °C light will flash, and press the / button to increase/decrease to a maximum of 200°C (hold button for rapid increase/decrease).

QUICK MENU FUNCTIONS

	Menu	Default Temperature (°C)	Default Cook Time (min)
	Default	180	15
	French Fries	200	25
	Steak	200	18
	Shrimp	180	18
	Chicken wings	200	20
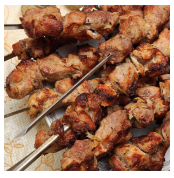	Meat skewers	200	18
	Vegetables	160	13
	Cake	160	20

	Chicken	200	20
	Fish	180	18
	Defrost	40	30

When cooking greasy foods like (e.g. chicken wings) insert the food tray inside the glass container.

CLEANING & STORAGE

Clean the appliance after every use.

The food tray inside of the appliance has a non-stick coating. Do not use metal kitchen utensils or abrasive cleaning materials to clean it, as this may damage the non-stick coating.

Remove the power cord from the wall socket and let the appliance cool down.

Note: Remove the food tray to let the air fryer cool down more quickly.

Wipe the outside of the appliance with a moist cloth.

Clean the glass container and the basket with warm water - use liquid dish soap and a non-abrasive sponge.

Tip: If dirt is stuck to the glass container, fill the glass container with hot water and some liquid dish soap. Place the dirty accessories in water to soak for as long as necessary.

Clean the inside of the appliance with hot water and a non-abrasive sponge.

Clean the heating element with a cleaning brush to remove any food residue.

Environment Protection

Dispose of the appliance at the appropriate electronic waste facility. By doing so, you will help to preserve the environment.



This marking indicates that your appliance should not be disposed of with other household wastes throughout the UK or the EU. To prevent possible harm to the environment or human health from uncontrolled waste disposal, recycle this

appliance responsibly to promote the sustainable reuse of material resources. Your appliance contains valuable materials which can be recovered or recycled. Leave it at a local civic waste collection point.

STORAGE

Unplug the appliance and let it cool down.

Make sure all parts are clean and dry.

Technical Data

Power	1500W
Voltage	220-240V~ 50/60Hz
Capacity	5.5L+3L

TROUBLESHOOTING

Symptom	Possible Cause	Solution
The air fryer does not work	The plug of the product is not inserted into the power socket.	1. Insert the plug into the grounded power socket 2. Set the right time needed for cooking, and then turn on the power.
Food ingredients not baked evenly in the air fryer	Some food ingredients should be over turned during the process of cooking.	If some food ingredients lay on the top, or join with other food ingredients (e.g. fried chips), then they must be over turned in the process of cooking, please refer “Air Frying” section of this instruction manual.
The food that is coming out of the air fryer is not crisp	The frying mode you selected.	Consider lightly adding some oil on the food being cooked to increase their crispy quality.
White smoke coming out of the product	You are cooking food ingredients with a high content of oil. Oil dirt from last use has not been cleaned from the air fryer and glass container.	1.When you are cooking food ingredients with comparatively high oil content in the fat-free fryer, large amount of oil fume will infiltrate into the container, which may be hotter than usual - this will not affect the final cooking effect. 2.The white smoke is produced by heating the oil and fat inside the air fryer. Make sure to clean the air fryer-each time after the use.

WARRANTY

REGISTER WARRANTY

Register your appliance online using the web link below within 14 days of purchase to validate your warranty.

Note the model number (543322) and serial number for your product before registering as it will be required in the registration process. The serial number is located at the bottom of the glass container.

Proof of purchase is required for a warranty claim.

www.bgepro.com/warranty

TERMS & CONDITIONS

BridgePro Management Ltd ("BPM").

Limited Warranty: This product is guaranteed for 12 months from the date of original purchase. This guarantee is valid in the UK only.
If any defect arises due to faulty materials or workmanship, the faulty products must be returned to the place of purchase. Refund or replacement is at the discretion of the retailer.

The following conditions apply:

- The product must be returned to the retailer with proof of purchase or a receipt.
- The product must be installed and used in accordance with the instructions contained in this instruction guide.
- It must be used only for domestic purposes.
- It does not cover wear and tear, damage, misuse or consumable parts.
- The product has limited liability for incidental or consequential loss or damage.

To validate your warranty, please visit www.bgepro.com/support/warranty/ and register with us online. Warranty is only valid with proof of purchase or receipt.

This product warranty is available to consumers only.
You are a consumer if you purchased the product at retail for personal, family, or household use. Except as otherwise stated under applicable law, this warranty is not available to retailers or other commercial purchasers and owners.
This product warranty is void if the product is used for situations other than a single-family household use or subjected to any voltage and wave forms other than as specified in this instruction manual (e.g. 220V-50Hz).

Transportation charges: Transportation charges for products under this warranty, subject to repair or replacement, shall be borne by the purchaser.

Conditions: Service centers or retail stores do not have the right to alter, modify, or in any way change the terms and conditions of this warranty.
Warranty registration is not necessary but is encouraged to validate product warranty.

About your warranty: Most warranty repairs or replacements are handled routinely but sometimes requests for warranty services may not be appropriate, e.g. warranty services would NOT apply if the product damage occurred because of misuse, lack of routine maintenance, shipping, handling, 3rd party warehousing, or improper installation. Similarly, warranty is void if the serial number on the product has been removed or the product has been altered or modified.

Normal wear: This warranty does not cover normal wear of any parts or damage resulting from any of the following negligent use or misuse of the product:

- Improper voltage or current,
- Use contrary to the operation instructions,
- Deviation from the instructions regarding storage and transportation, or
- Repair or alteration by any 3rd party.

This warranty does not cover Acts of God such as fire, flood, hurricanes, and tornados.
BPM shall not be liable for any incidental or consequential damages by the breach of any express or implied warranty.
Except to the extent prohibited by applicable law any implied warranty of merchantability or fitness for the particular purpose is limited in duration of this warranty.

DECLARATION OF CONFORMITY

Manf: BRIDGEPRO MANAGEMENT LTD, 167-169 GREAT PORTLAND STREET, LONDON W1W 5PF

EU Rep: Authorised Rep Compliance Ltd., Ground Floor, 71 Lower Baggot Street, Dublin, D02 P593, Ireland. www.arccompliance.com

This declaration of conformity is issued under the sole responsibility of the manufacturer BridgePro Management Ltd.

Product Name	Product Type	Product Part Number
BridgePro 10-in-1 DIGITAL PORTABLE AIR FRYER (3-5.5 LITRE)	Air Fryer Oven	543322 (MC-AF5503)

Note: Serial number is stated on each product rating label.

The object of the declaration as described above is in conformity with the relevant Union harmonisation legislation:

Legislation	Title
2006/42/EC	Machinery Directive
2014/35/EU	Low Voltage Directive (LVD)
2014/30/EU	EMC Directive
2011/65/EU	RoHs Directive

For the evaluation of compliance, the following standards have been applied:

Machinery Directive	BS EN ISO 12100:2010 BS EN 809:1998+A1:2009	LVD	EN IEC 60335-2-9:2023+A11:2023 EN 60335-1:2012+A11:2014+A13:2017+A1:2019+A14:2019+A2:2019+ A15:2021+A16:2023 EN 62233:2008
EMC	EN IEC 55014:2021 EN IEC 61000-3-2:2019+A1:2021 EN 61000-3-3:2013+A1:2019+A2:2021 EN IEC 55014-2:2021	RoHs	ROHS Directive (EU) 2015/863 2011/65/EU
EMF	EN 62233:2008	Packaging	ISTA 3A:2018

I hereby declare that the equipment named above has been designed to comply with the relevant sections of the above referenced standards. The unit complies with all relevant essential requirements of the Union harmonisation legislation.

Signed for an on behalf of BridgePro Management Ltd.

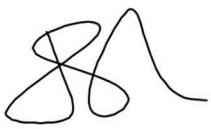

Director

London, England, 01/01/2026

NOTES

NOTES